Bottom view

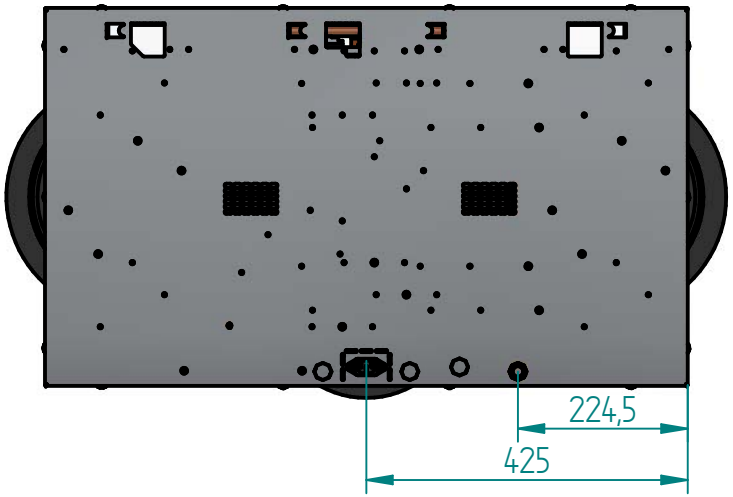

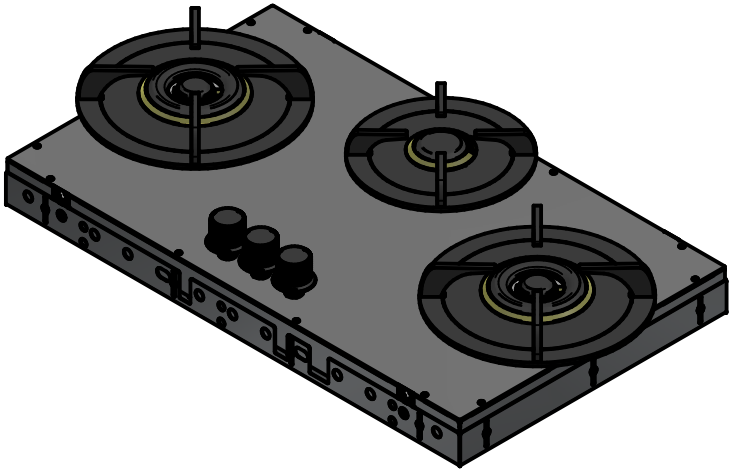

Front view

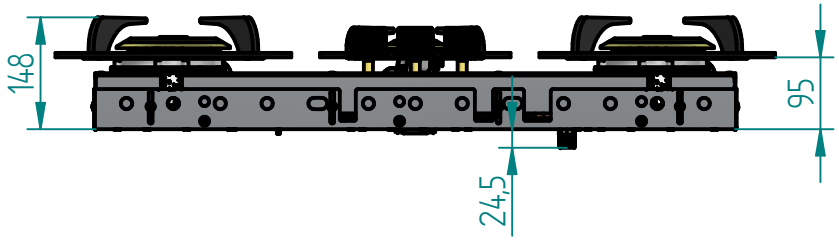

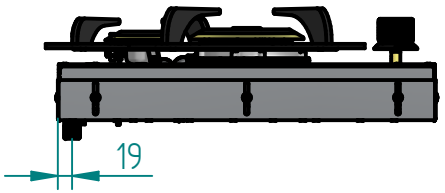

Side view

Top view

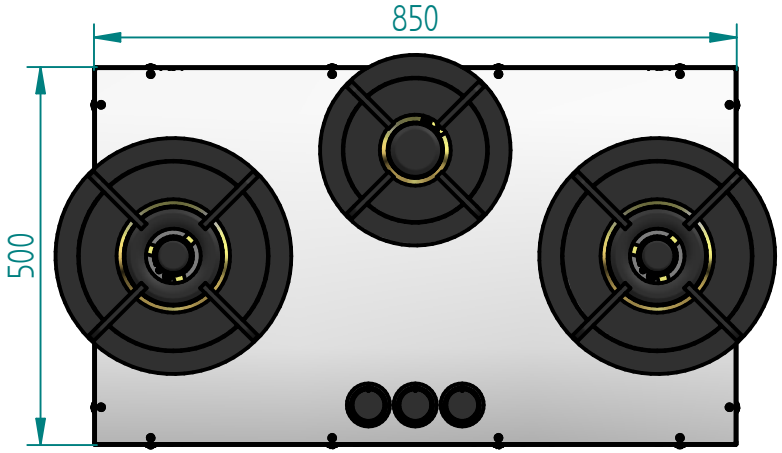

REVISION HISTORY			
REV	DESCRIPTION	DATE	APPROVED

	NAME	DATE
DRAWN	Rens Bruins	13/01/25

WEIGHT: 27,720 kg

VARIOCOOK

UNLESS OTHERWISE SPECIFIED:
- DIMENSIONS IN MM
- TOLERANCES ACC. TO ISO 22081

Variocook

TITLE:
Cambridge - Presentation mm

SIZE:	Drawing NO:	REV.
A4		

SCALE: 1 : 10 | SHEET 1 OF 1