Bottom view

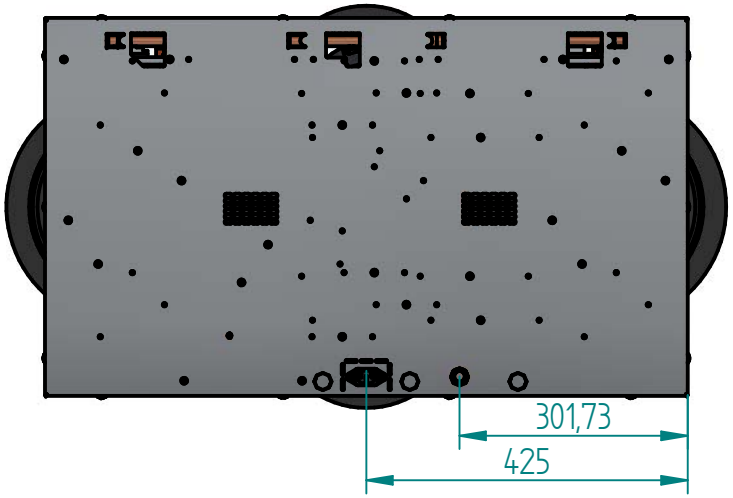

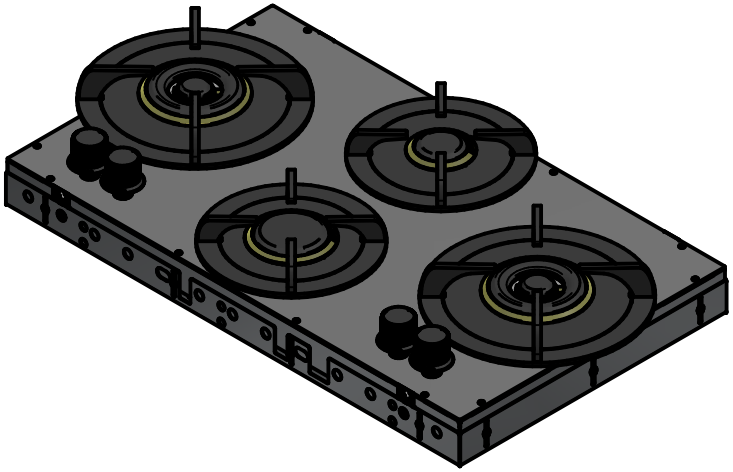

Front view

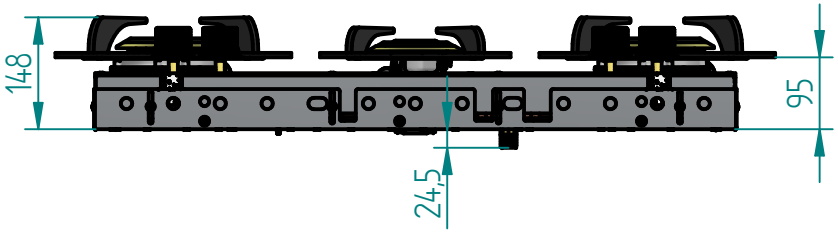

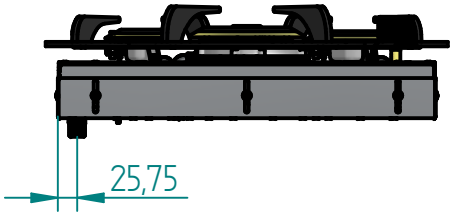

Side view

Top view

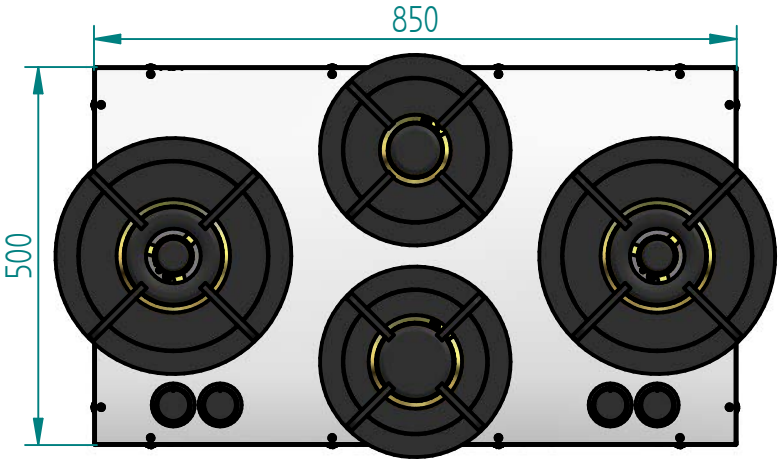

REVISION HISTORY			
REV	DESCRIPTION	DATE	APPROVED

	NAME	DATE
DRAWN	Rens Bruins	13/01/25

WEIGHT: 31,513 kg

UNLESS OTHERWISE SPECIFIED:
- DIMENSIONS IN MM
- TOLERANCES ACC. TO ISO 22081

Variocook

TITLE:
Dublin – Presentation mm

SIZE: A4 | Drawing NO: | REV.

SCALE: 1 : 10 | SHEET 1 OF 1